Balanced Tube Preamplifier V6.4 - Main

by Konrad Siemientkowski

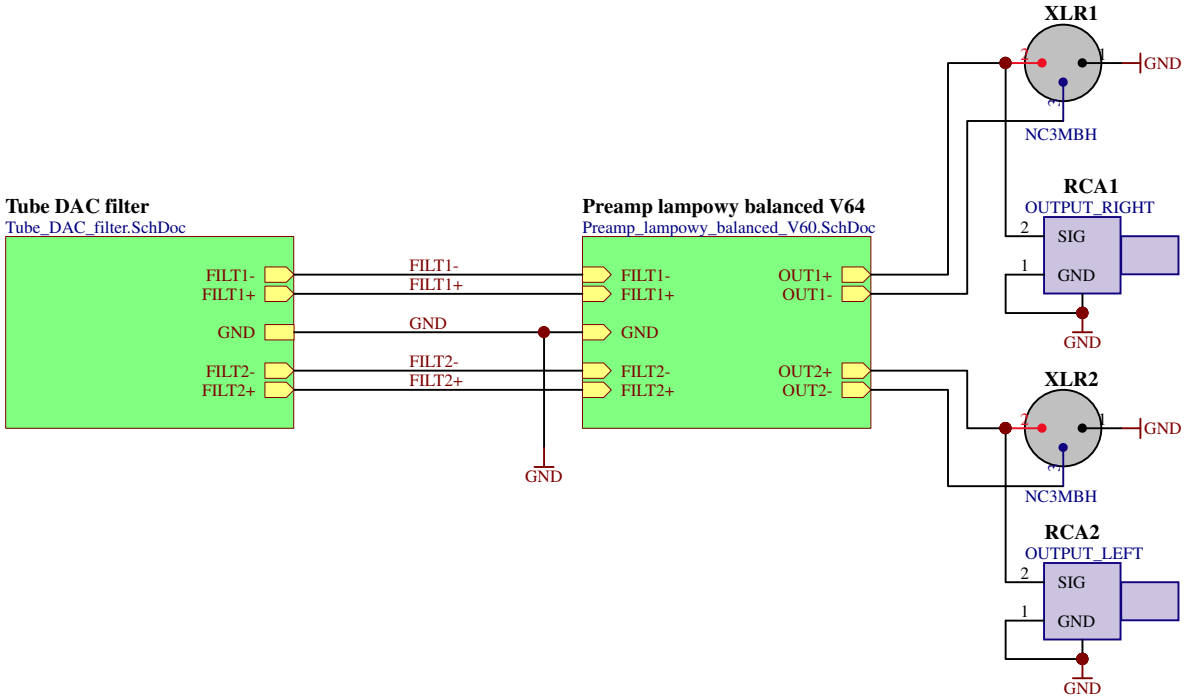

DIY use only. Comercial use without permission is prohibited.
MuzgAUDIO Konrad Siemientkowski. All right reserved.
www.muzgaudio.com
muzgaudio@muzgaudio.com

Title		
Size A4	Number	Revision
Date: 2019-10-21	Sheet of	
File: D:\MuzgDIY\..\Balanced_Preamp_V61_Main.SchDoc	Drawn By:	

Balanced Tube Preamplifier V6.4 - Filter

by Konrad Siemientkowski

Values in filter circuit valid for ES9038PRO DAC in current mode.
For other DACs see: https://docs.google.com/spreadsheets/d/1EEtyUL0yzHBsFajiF484S8neK-u8gXl5srcWeKRWkOI/edit#gid=0

To create line preamplifier bypass this circuit.

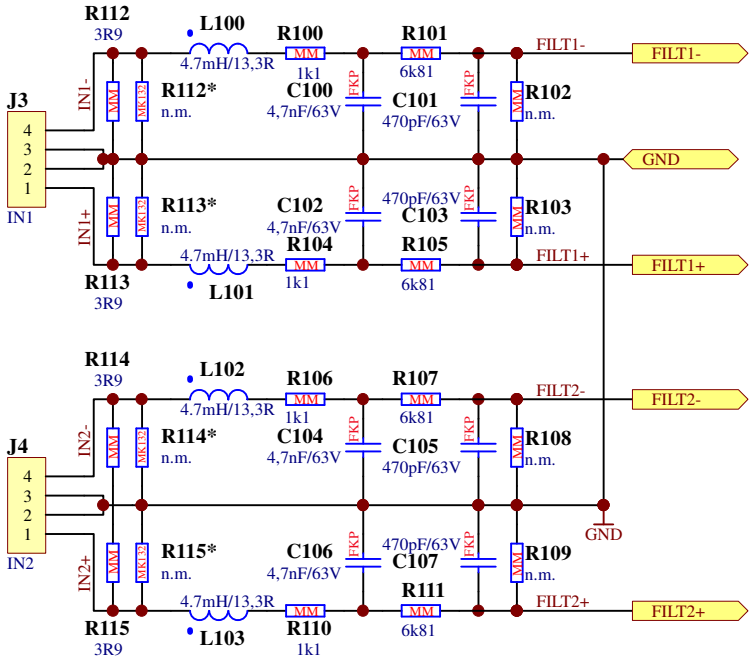

DIY use only. Comercial use without permission is prohibited.
MuzgAUDIO Konrad Siemientkowski. All right reserved.
www.muzgaudio.com
muzgaudio@muzgaudio.com

Title		
Size A4	Number	Revision
Date: 2019-10-21	Sheet of	
File: D:\MuzgDIY\..\Tube_DAC_filter.SchDoc	Drawn By:	

Balanced Tube Preamplifier V6.4 - Preamplifier

by Konrad Siemientkowski

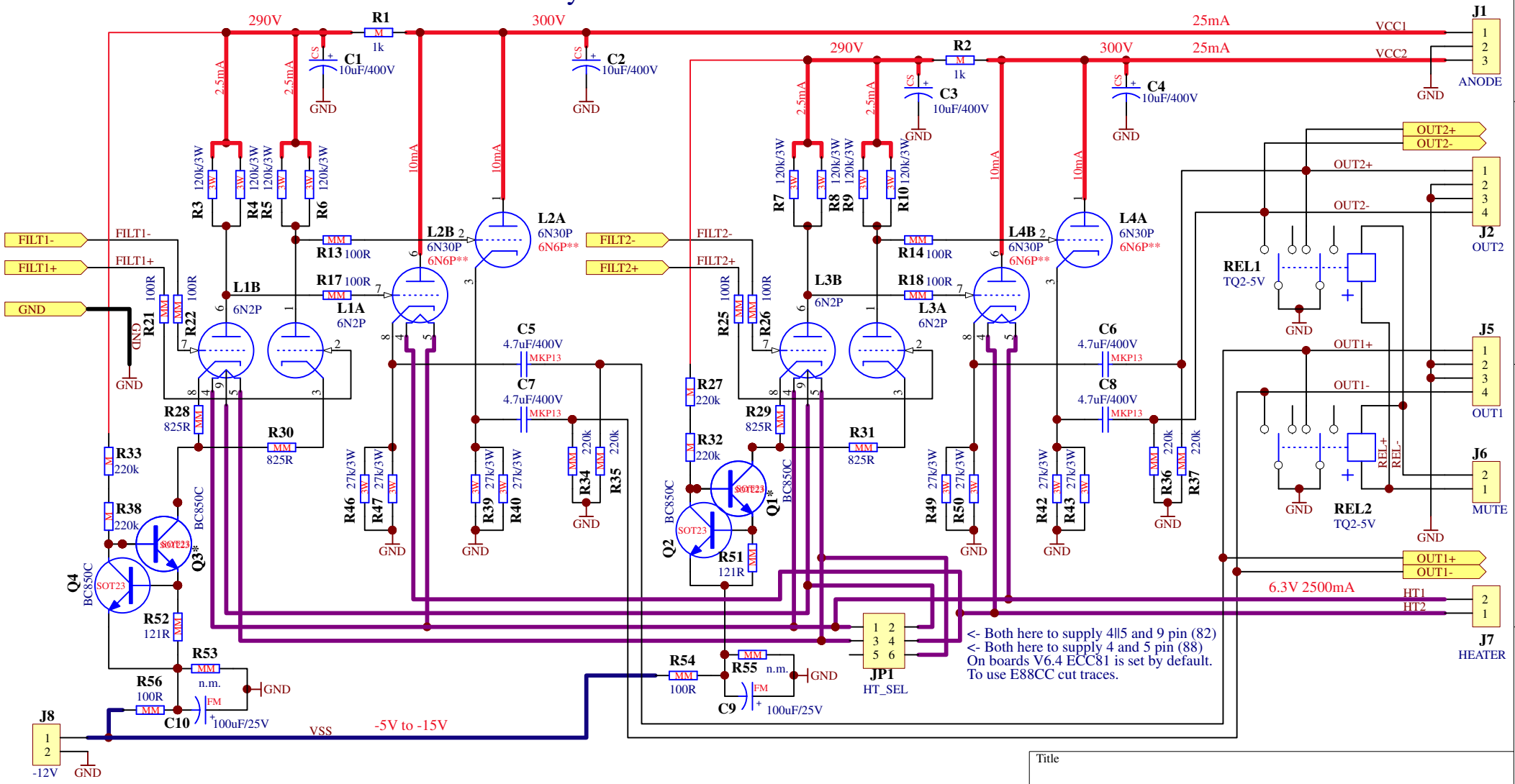

**6N6P could be used with lower performance.
n.m. - component not populated

DIY use only. Comercial use without permission is prohibited.
MuzgAUDIO Konrad Siemientkowski. All right reserved.
www.muzgaudio.com
muzgaudio@muzgaudio.com

Title		
Size A4	Number	Revision
Date: 2019-10-21	Sheet of	
File: D:\MuzgDIY\..\Preamp_lampowy_balanced_V6.0.SchDoc	Drawn by:	