# Balanced Tube Preamplifier V6.4 - Main

by Konrad Siemientkowski

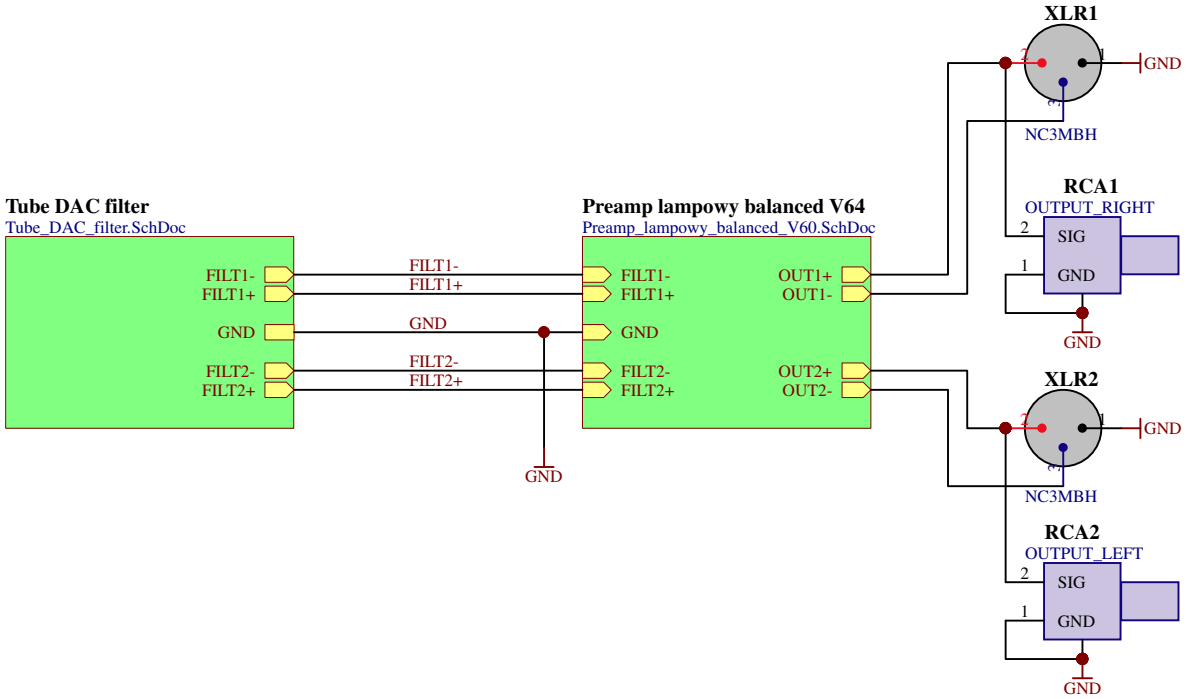


DIY use only. Comercial use without permission is prohibited.
MuzgAUDIO Konrad Siemientkowski. All right reserved.
www.muzgaudio.com
muzgaudio@muzgaudio.com

| | | |
|---|---|---|
| Title | | |
| Size A4 | Number | Revision |
| Date: 2019-10-20 | Sheet of | |
| File: D:\MuzgDIY\..\Balanced_Preamp_V61_Main.SchDoc | Drawn By: | |

# Balanced Tube Preamplifier V6.4 - Filter

by Konrad Siemientkowski

Values in filter circuit valid for 4 x PCM1704 DAC in current mode.
For other DACs see: https://docs.google.com/spreadsheets/d/1EEtyUL0yzHBsFajiF484S8neK-u8gXl5srcWeKRWkOI/edit#gid=0

**To create line preamplifier bypass this circuit.**

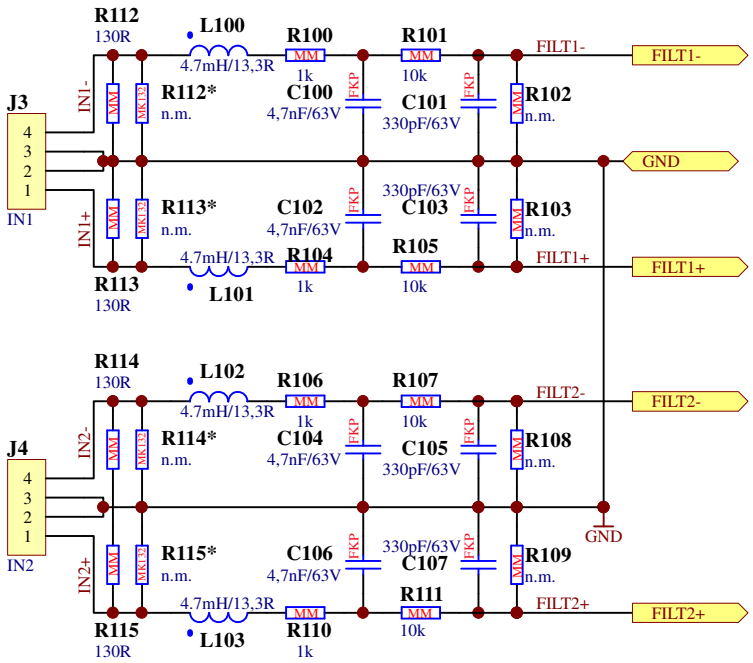


DIY use only. Comercial use without permission is prohibited.
MuzgAUDIO Konrad Siemientkowski. All right reserved.
www.muzgaudio.com
muzgaudio@muzgaudio.com

| Title | | |
|---|---|---|
| Size A4 | Number | Revision |
| Date: 2019-10-20 | Sheet of | |
| File: D:\MuzgDIY\..\Tube_DAC_filter.SchDoc | Drawn By: | |

# Balanced Tube Preamplifier V6.4 - Preamplifier

by Konrad Siemientkowski

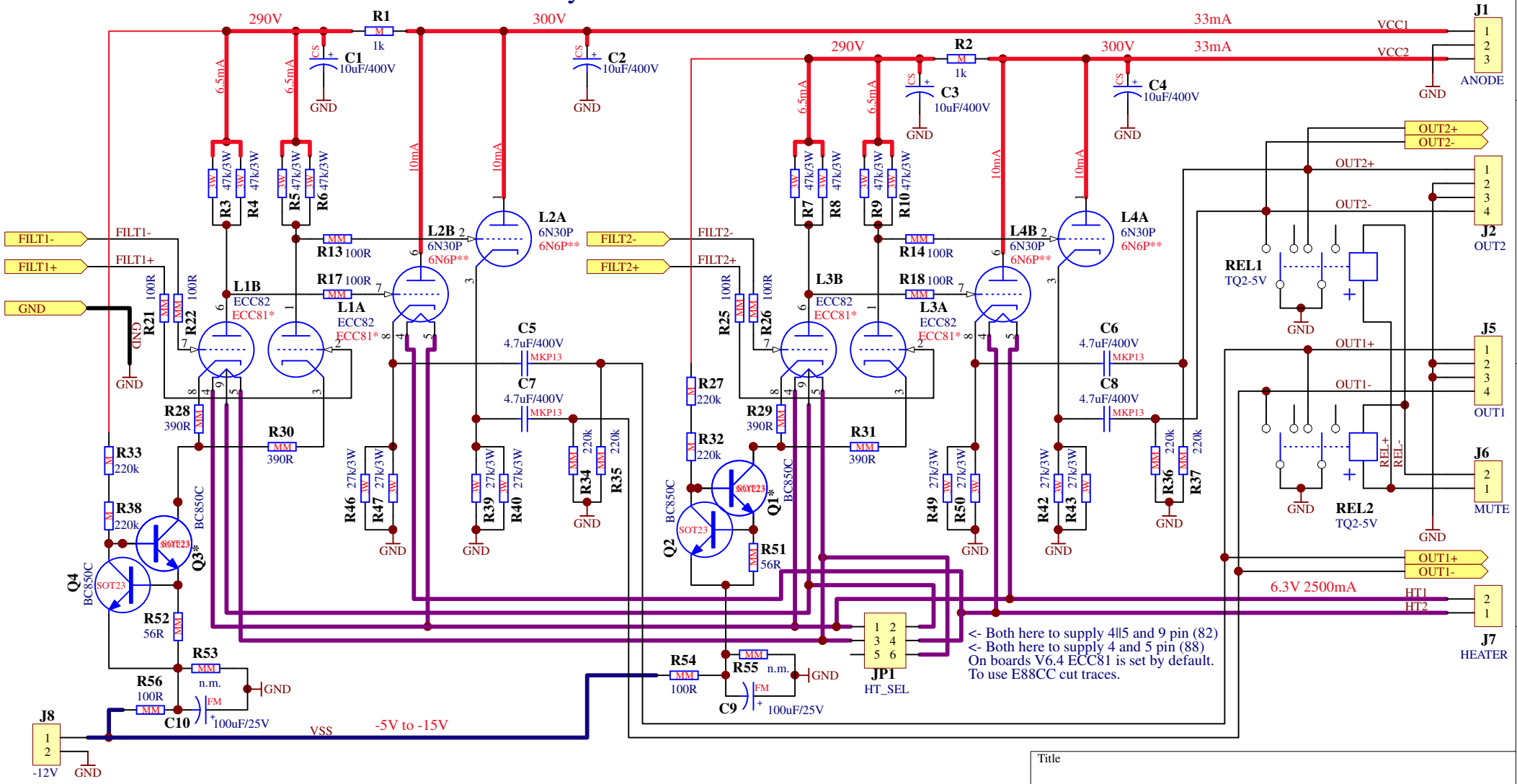


*For Current mode DAC use ECC81
**6N6P could be used with lower performance.
n.m. - component not populated

DIY use only. Comercial use without permission is prohibited.
MuzgAUDIO Konrad Siemientkowski. All right reserved.
www.muzgaudio.com
muzgaudio@muzgaudio.com

| Title | | |
|---|---|---|
| Size A4 | Number | Revision |
| Date: 2019-10-20 | Sheet of | |
| File: D:\MuzgDIY\..\Preamp_lampowy_balanced_V6.0.SchDoc | Drawn by: | |